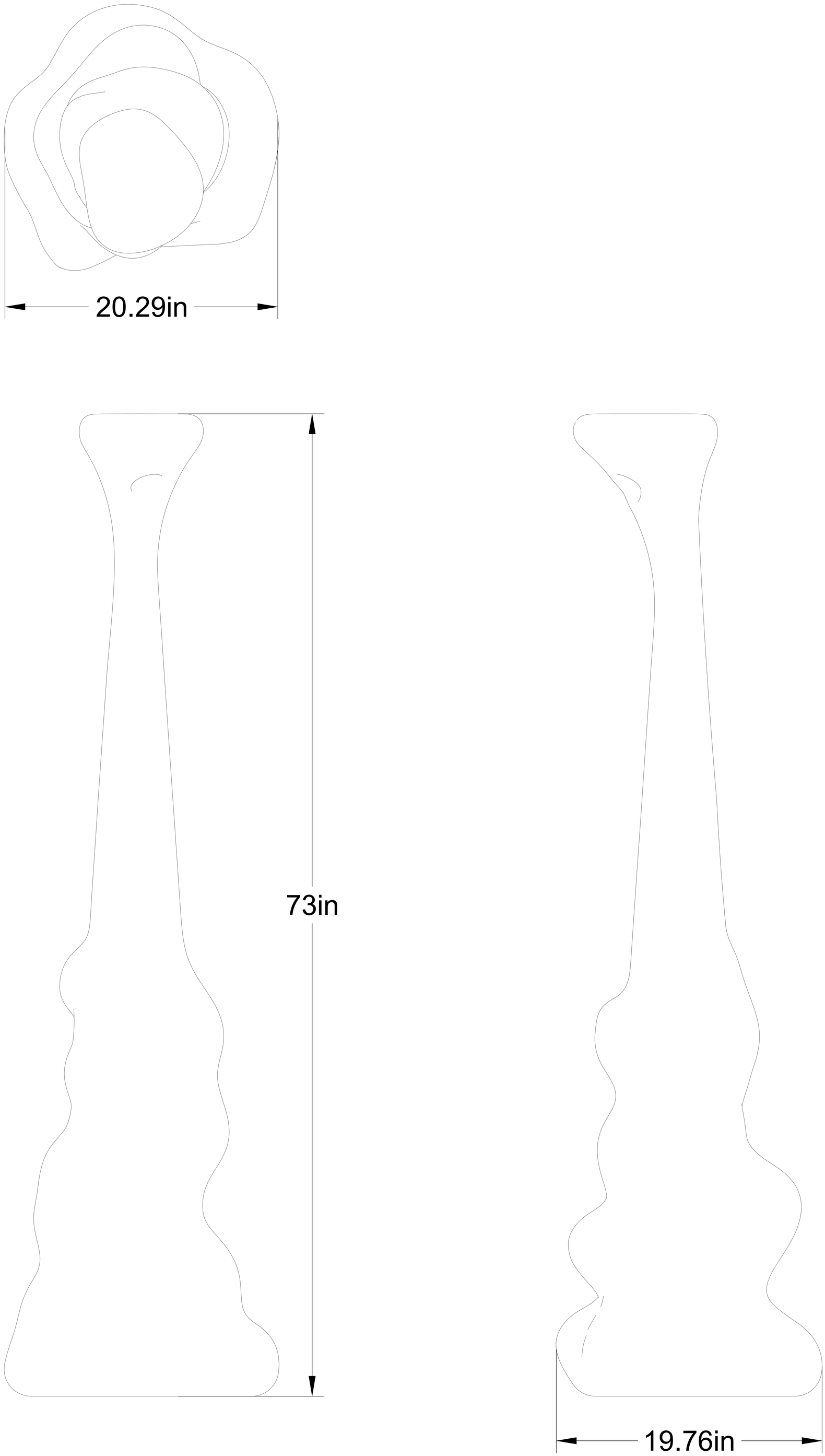

PROJECT: Admin Project				
TITLE: Floor Lamp_2				
APPROVED	DATE	CODE	DWG NO	REV
CHECKED	DATE			
DRAWN Vraig Bakayan 02-09-2025	SCALE 1:1	WEIGHT	SHEET 1/1	