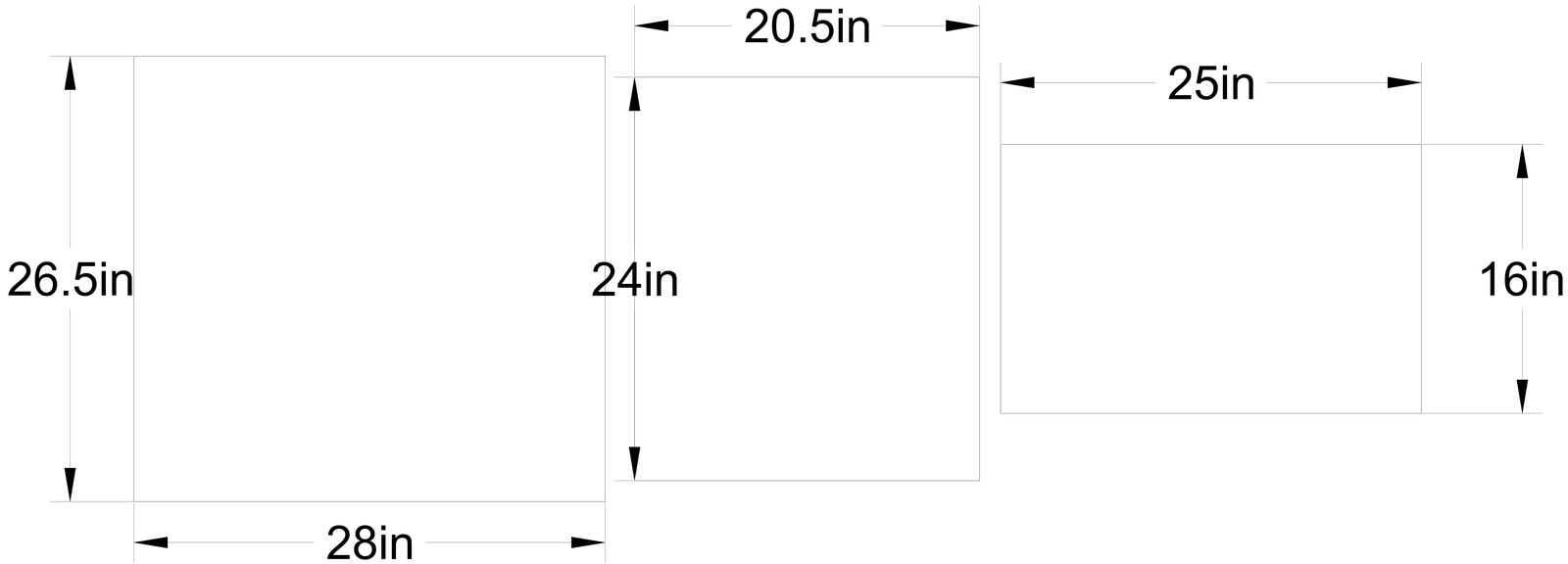

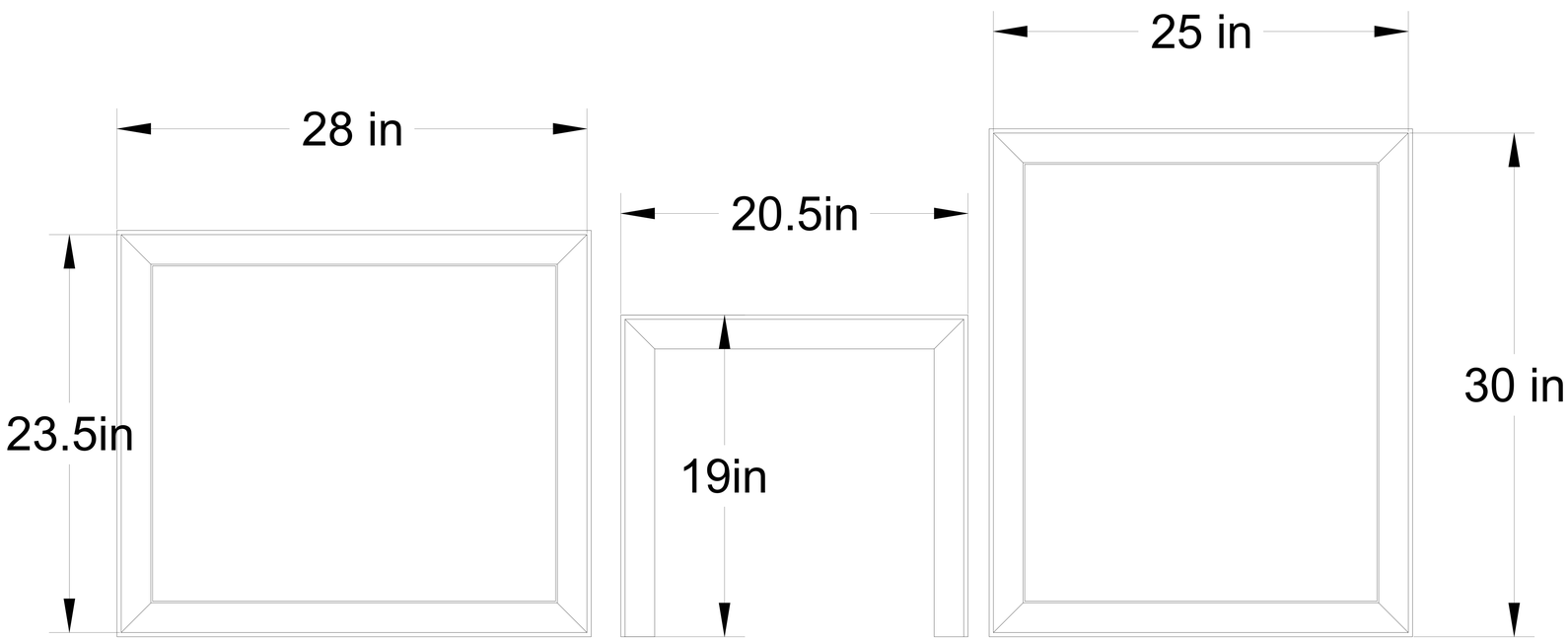

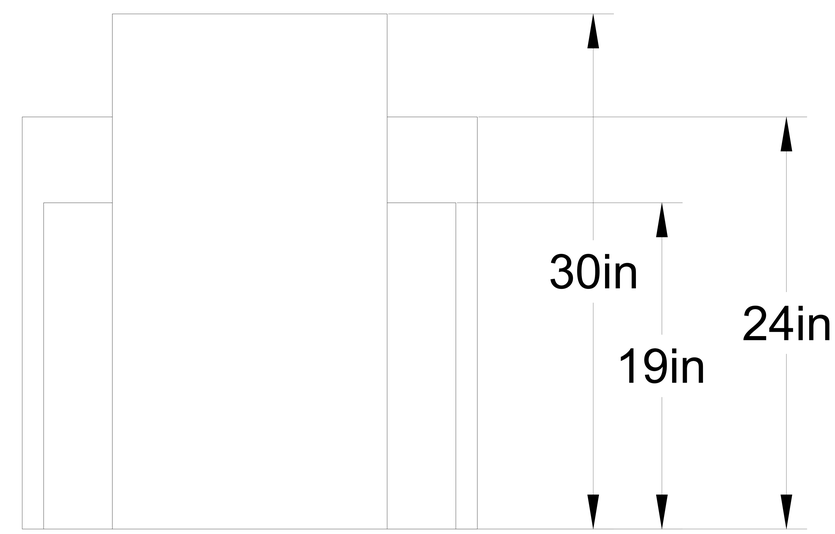

	PROJECT: Admin Project
	TITLE: TFH side Tables
DRAWN BY:	DATE: ---- TIME: ---- DRAWN: ----
CHECKED:	DATE: ---- TIME: ---- CHECKED: ----
DRAWN:	SCHEMATIC IN AUTOCAD 2 D	MODEL:	SHEET: 1